Are you ready to jump?

JUMP
SURFACE LED

DIRECT, RIBBED MESOOPTICS LENS - SOLIDSIDE
CRI >80 3000K, 2400 lm/4ft

Project:

Spec Type:

Catalog No: 1211LCGQE

Qty

Line Notes:

Ordering guide

Product Type	Source	Color Temp *	Lumens *	Lower Optics	Upper Optics	Run Length	Wiring †	Voltage	Driver	Finish
1211	L	C	G	Q	E					
Jump Symmetric	L LED	A 4000K B 3500K C 3000K	G 2400 lm/4ft E 3600 lm/4ft	Q MesoOptics Lens	E No Perf P PixelPerf S SplashPerf	04 4' 08 8' XX Total run length (4' increments)	1 1 cct 3 1 cct w/ EM cct 5 1 cct w/ BP 7 1 cct w/ Dimming 8 1 cct w/ TW B 2 cct A/B	1 120V 2 277V 3 347V	E Standard	W Standard White T Titanium Silver B Black X Custom

* Nominal values within a range. Consult ies file for exact color temp and lumens † Consult website for complete list of standard wiring options

Mounting Hardware

Surface — Mount Type
Consult separate mounting spec sheet for mount type options

Endcaps - .

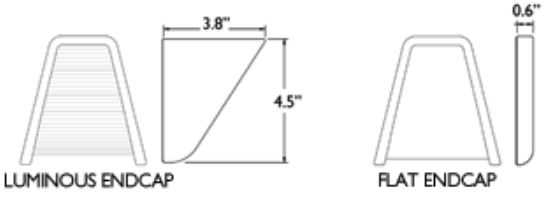

Integrated Controls Please indicate with check mark.

☐ Response Daylight Single Zone (DS)

© 2014 Koninklijke Philips N.V. All rights reserved.
Specifications are subject to change without notice.
www.philips.com/luminaires

DIRECT, RIBBED MESOOPTICS LENS - SOLIDSIDE

Photometry

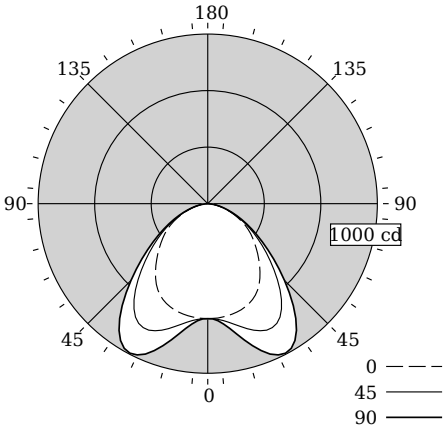

0% Up / 100% Down

Total Output	2183 lm
Efficacy	77.7 lm/W
CCT	3080K
CRI	82
R9	16
Distribution	0% Up / 100% Down
Spacing Criteria (0/90/180°)	1.27/1.71/NA
Meets RP-1-04 recommendations for VDT-Normal spaces	

Values per 4ft unit

Fixture photometry has been conducted by an NVLAP accredited testing laboratory in accordance with IESNA LM-79:2008

Lumen maintenance of the LEDs has been tested by the manufacturer in accordance with IESNA LM-80:2008

IES files for this and other photometric options can be downloaded online at www.lightingproducts.philips.com

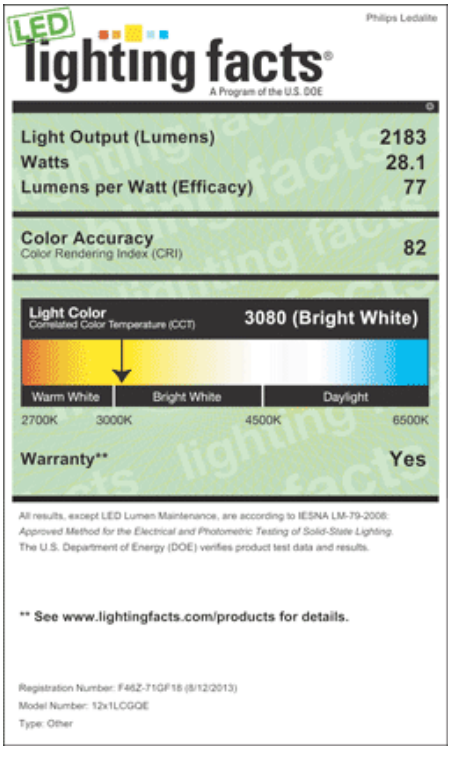

Candela Distribution

Vertical Angle	Horizontal Angle 0	22.5	45	67.5	90	Zonal Lumens
0	678	678	678	678	678	0
5	677	674	685	693	693	66
15	662	683	750	812	832	213
25	624	680	823	942	984	373
35	536	607	758	873	912	459
45	416	461	553	618	640	417
55	309	327	360	384	393	319
65	196	201	211	217	220	208
75	92	92	96	98	98	102
85	21	21	21	19	16	25
90	0	1	0	0	0	0
95	0	0	0	0	0	0
105	0	0	0	0	0	0
115	0	0	0	0	0	0
125	0	0	0	0	0	0
135	0	0	0	0	0	0
145	0	0	0	0	0	0
155	0	0	0	0	0	0
165	0	0	0	0	0	0
175	0	0	0	0	0	0
180	0	0	0	0	0	0

Coefficients of Utilization (%)

RCR	Ceiling:	80				70				50	
	Wall:	70	50	30	10	70	50	30	50	30	10
0		119	119	119	119	116	116	116	111	111	11
1		110	105	101	98	107	103	100	99	96	93
2		100	93	86	81	98	91	85	87	82	78
3		92	82	74	68	90	81	73	78	71	66
4		85	73	65	58	82	72	64	69	63	57
5		78	66	57	51	76	64	56	62	55	50
6		72	59	50	44	70	58	50	56	49	44
7		67	54	45	39	65	53	45	51	44	39
8		62	49	41	35	61	48	40	47	40	35
9		58	45	37	31	57	44	37	43	36	31
10		54	41	34	28	53	41	33	40	33	28

Avg. Luminance (cd/m2)

Vertical Angle	Horizontal Angle 0	45	90
55	4544	5293	5779
65	3911	4211	4390
75	2998	3128	3193
85	2032	2032	1548

Electrical Specifications

Input Voltage	120V
Input Power	28.1W
Input Current	0.2A
Power Factor	0.983
Tested values – contact technical support for rated values. Off-state power zero unless certain controls are specified.	

© 2014 Koninklijke Philips N.V. All rights reserved.
Specifications are subject to change without notice.
www.philips.com/luminaires

DIRECT, RIBBED MESOOPTICS LENS - SOLIDSIDE

Options and Details

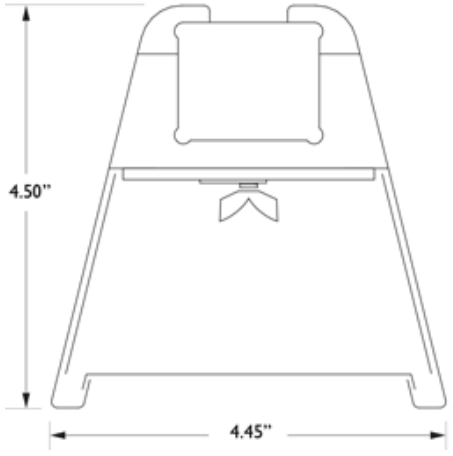

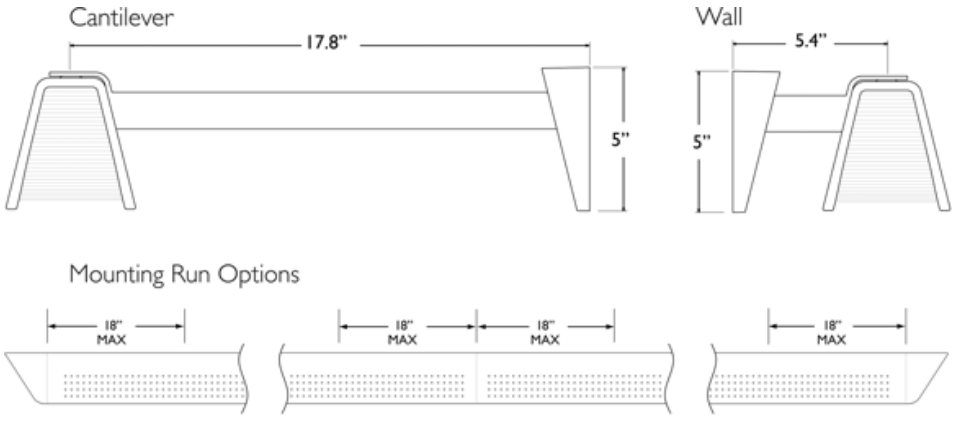

Optics & Styles

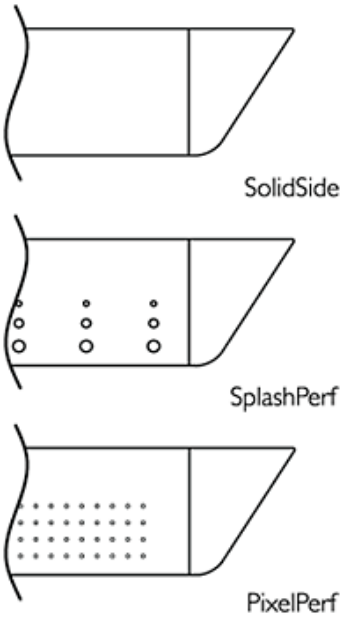

Housing

20 gauge cold-rolled steel precision formed and welded with optional perforated patterns.

Weight

Maximum 3.5lb/ft.

Optical System

White light emitted from the LED sources passes through a biconvex lens where it is internally reflected and laterally refocused. Light is then redirected by Miro Silver reflectors and exits through the optical lens assembly. The optical lens assembly consists of an acrylic extrusion with a ribbed profile holding a layer of MesoOptics film. MesoOptics homogenizes the light and color to ensure consistency while controlling high angle glare and creating an optical batwing distribution.

Standard Driver

Dimming: 0-10V, 5-100%. Output is Class 2 rated.

Lumen Maintenance

At an ambient temperature of 25°C, the LED lumen maintenance expectation is L_{80} (12k) >60,000 hrs.

Mounting

Variable position mounts are supplied for each joint and end. The mounts can be installed up to 18" from joints and end locations. Tamper-resistant aircraft cable grippers provide infinite vertical adjustment capability. Aircraft cable, crimp and cable gripper are independently tested to meet stringent safety requirements.

Joints

Self-aligning joining system with hands-free pre-joining wire access.

Endcaps

Endcaps are diecast aluminum, available in luminous sculpted (standard) or flat (optional).

Electrical

Factory pre-wired to section ends with quick-wire connectors.

Approvals

Certified to UL, CSA and IES standards.

Finish

High quality powder coated, available in matte white, black or titanium silver. Other factory and custom colors available on request.

Environment

Rated for dry or damp locations in operating ambient temperatures 0-40°C (32-104°F). Certain luminaire components may be adversely affected by contaminants. Damage caused by sulfur, chlorine, petroleum based solutions or other contaminants are not covered under warranty.

Due to continuing product improvements, Philips Ledalite reserves the right to change the specifications without notice.

©2014 Koninklijke Philips N.V. All rights reserved.
Specifications are subject to change without notice.
www.philips.com/luminaires

Philips Lighting
North America Corporation
200 Franklin Square Drive
Somerset, NJ 08873
Phone: 855-486-2216

Philips Lighting Company
281 Hillmount Road
Markham ON, Canada L6C 2S3
Phone: 800-668-9008